AUTH–FLORENCE KEY KEEPER INSTALLATION CUT SHEET

(AMERICAN DEVICE STYLE K26 KEY KEEPER)

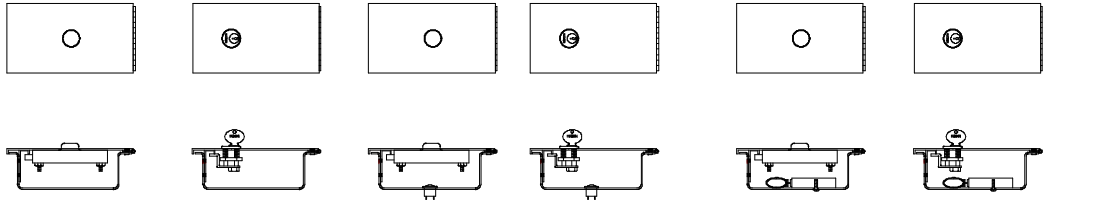

(K26) (P.O. LOCK) | (K26C) (PRI LOCK) | (K26P) (P.O. LOCK) (W/PUSHBUTTON) | (K26P–C) (PRI LOCK) (W/PUSHBUTTON) | (K26R) (P.O. LOCK) (W/RETRACT CHAIN) | (K26R–C) (PRI LOCK) (W/RETRACT CHAIN)

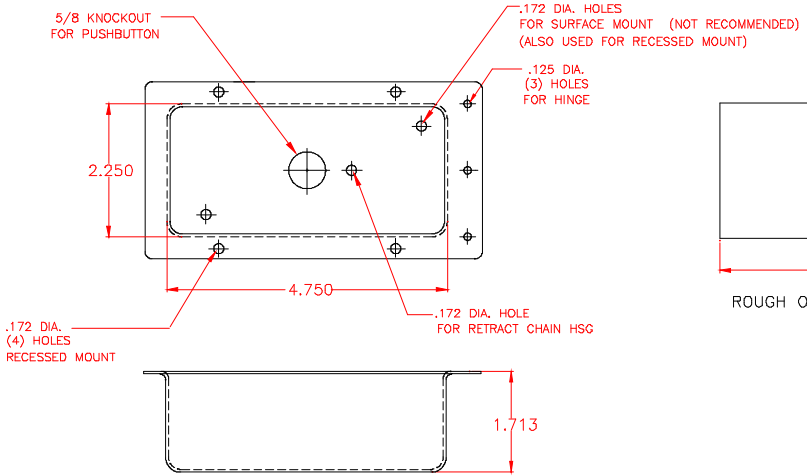

KEY KEEPER HOUSING

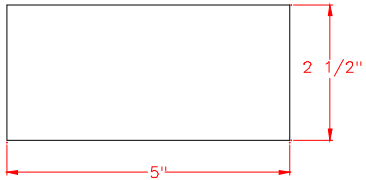

ROUGH OPENING DIMENSIONS

INSTALLATION NOTES:

1. THE REQUIRED HARDWARE TO MOUNT THE KEY KEEPER IS THE RESPONSIBILITY OF THE CUSTOMER.
2. SIX (6) HOLES ARE PROVIDED FOR RECESS WALL MOUNTING. TWO (2) HOLES ALLOW FOR SURFACE MOUNTING BUT ARE NOT RECOMMENDED FOR SECURITY REASONS.
3. MAKE A 2 1/2" HIGH X 5" WIDE ROUGH OPENING CUT IN THE WALL.
4. SLIDE THE UNIT INTO THE ROUGH OPENING WITH THE HINGE SIDE TO THE RIGHT.
5. OPENING THE DOOR, TWO (2) .172 HOLES ARE IN THE REAR (OR INSIDE) OF THE HOUSING AND FOUR (4) .172 HOLES ARE IN THE RIM OF THE HOUSING. USING THE KEY KEEPER HOUSING AS A TEMPLATE, DRILL SIX (6) PILOT HOLES THROUGH THE CENTER OF THE SIX (6) .172 HOLES IN THE HOUSING.
6. USE THE HOUSING AS A TEMPLATE TO LOCATE THE 5/8" HOLE FOR PUSHBUTTON INSTALLATION.
7. SECURE THE UNIT WITH THE DESIRED FASTENER, IE. WOOD SCREWS, ANCHORS, ETC.

AUTH AF FLORENCE
MANUFACTURING COMPANY
5935 CORPORATE DRIVE
MANHATTAN KANSAS 66503

CS5030 JCP/KS 03/12/04